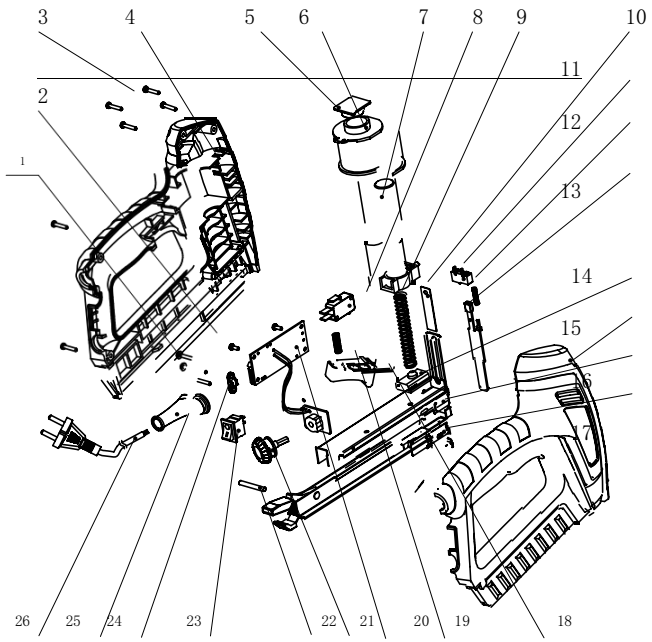

Serial number	Code	name	quantity	Material	singleton weight	total weight	remarks
26	303003030	Power cord plug	1	H05VV-F 2 × 0.75mm²			
25	301011001	Wire sheath	1	PVC	7		currencyPLD2000
24	301017001	Line pressing buttons	1	PA6-GF30	0.5		currencyPLD2000
23	303008006	ON/OFF switch	1	KND1-6/1	6(6)A 250VAC	4	currencyPLD6010
22	302007004	Guide rail locating pin	1	Bearing steel 4 × 24.5	2.5		
21	301003002	A knob	1	PA6-GF30	2.5		
20	303020043	Circuit board	1	PLD6030	29		
19	302005031	The trigger spring	1	70 0.7 × 7.6 × 23	0.7		
18	301004003	The trigger	1	PA6-GF30	6.5		
17	202002019	Send nail components	1		121		currencyPLD6010
16	202002015	Cladding components	1		70		currencyPLD6010
15	301002002	right shell	1	PA6-GF30 (TPE)	220		
14	301058006	Damping block	1	rubber δ 8	6		currencyPLD6010
13	202002017	Bumper assembly	1	PVC Insulation Shore 65 degrees	11.5		currencyPLD6010
12	302005010	Bumper spring	1	Φ 0.6 × 2.3 × 17.6	0.5		currencyPLD6010
11	303008032	Micro switch	1	MQS-1,3A, 250VAC, 2 Pin	2		currencyPLD6010
10	202002004	laminations	1	65Mn δ 0.6	3		currencyPLD6010
9	302005019	Core spring	1	65Mn 1 × 11 × 85	4		currencyPLD6010
8	303008010	switch	1	DA7-10/1, 10(10)A,250VAC,16(16)A 125VAC	7.5		
7	202003001	Core components	1		114		currencyPLD6010
6	203004002	Coil components	1		264		currencyPLD6010
5	301058007	Damping block	1	rubber δ 7.8	6		currencyPLD6010
4	301001002	Left shell	1	PA6-GF30 (TPE)	205		
3	305001003	Cross head self-tapping screw.	6	GB/T845 ST2.9 × 16	1		
2	305001034	Cross head self-tapping screw.	2	GB/T845 ST2.9 × 8 Casserole black	0.5		
1	305001037	Cross head self-tapping screw.	2	GB/T9074.18 ST2.9 × 15	0.5		

Zhejiang Prulde Electric Appliance Co., Ltd.

PLD6030exploded view

101003001